Rev.No.	Ch.Let	Alterations	Date	Sign.	Appd.

All Dimensions are in MM

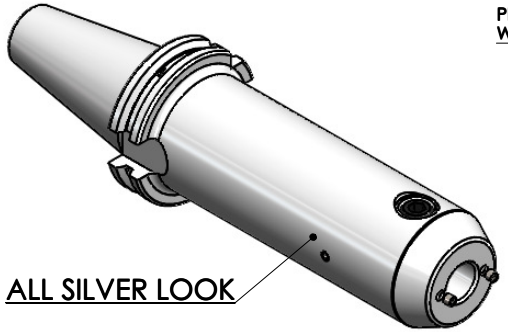

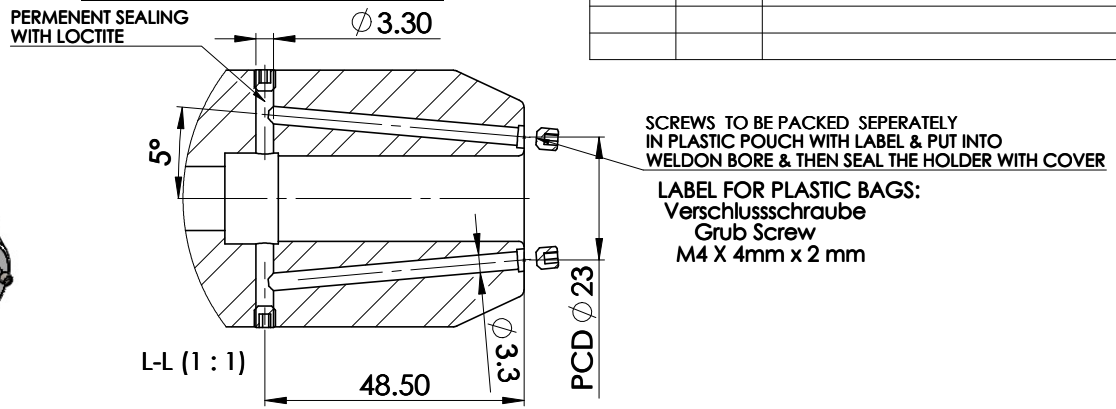

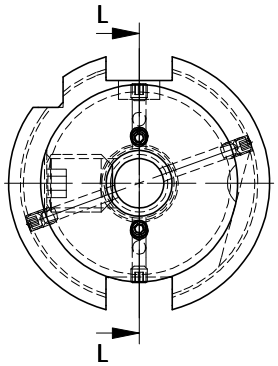

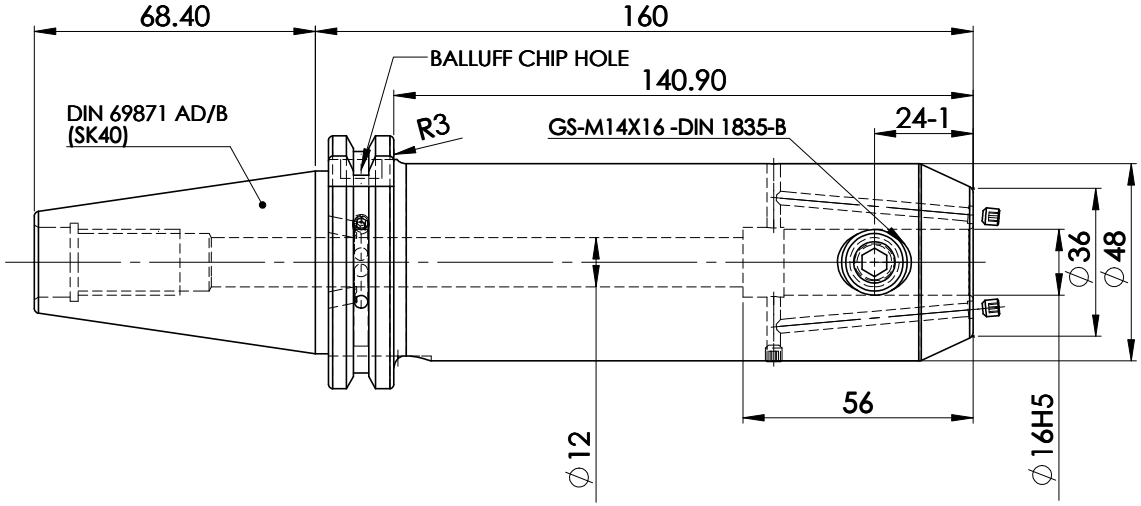

Label :

2002306.1602
WELDON-AUFNAHME MIT KK
WELD.HOLDER COOL.CHANNEL
DIN69871 SK40 ADB
WK 16 mm x 160 mm
G2.5 / 25000 U/MIN

MARKING : DIN 69871 AD/B SK40 WK16H160
G2.5 25000 U/MIN

NOTE :

BALANCING 2.5G AT 25000 RPM

WEIGHT :2.52 kgs

ITEM NO.	PART NUMBER	DESCRIPTION	QTY
1	FWS409H-EKH16160	SK40EK16160FWW	1
2	GS-M4 x 4	GRUB SCREW(B.O.)	6
3	GS-M14X16-DIN1835-B	GRUB SCREW-(B.O)	1

μ m	0.012	0.025	0.05	0.1	0.2	0.4	0.8	1.6	3.2	6.3	12.5	25	50
GRADES		N1	N2	N3	N4	N5	N6	N7	N8	N9	N10	N11	N12
SYMBOLS													

TOLERANCE		
FREE DIMENSIONS TOLERANCE		
Dimns.	Dia	Length
0.5 to 3	± 0.05	± 0.10
3 to 6	± 0.10	± 0.15
6 to 30	± 0.15	± 0.20
30 to 120	± 0.20	± 0.25
120 to 500	± 0.30	± 0.50

MATERIALS: 16MnCr5

2019	NAME	DATE
DRAWN	PGK	20/06
CHECKED	RVL	20/06
APPROVED		
SCALE : 2:1	QTY. :	

PART NAME: SK40EK16160FWW

WEMAG
2002306.1602

DRAWING No. FWS409H-EKH16160

REV. 00