Rev.No.	Ch.Let	Alterations	Date	Sign.	Appd.

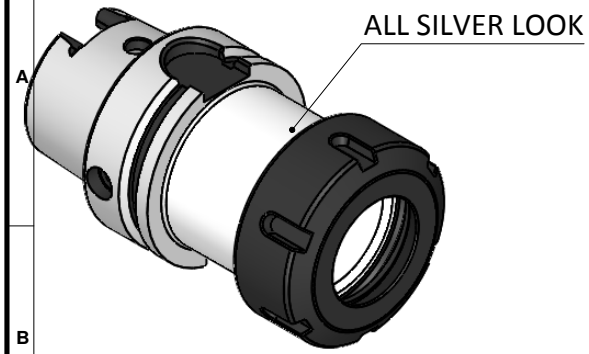

All Dimensions are in MM

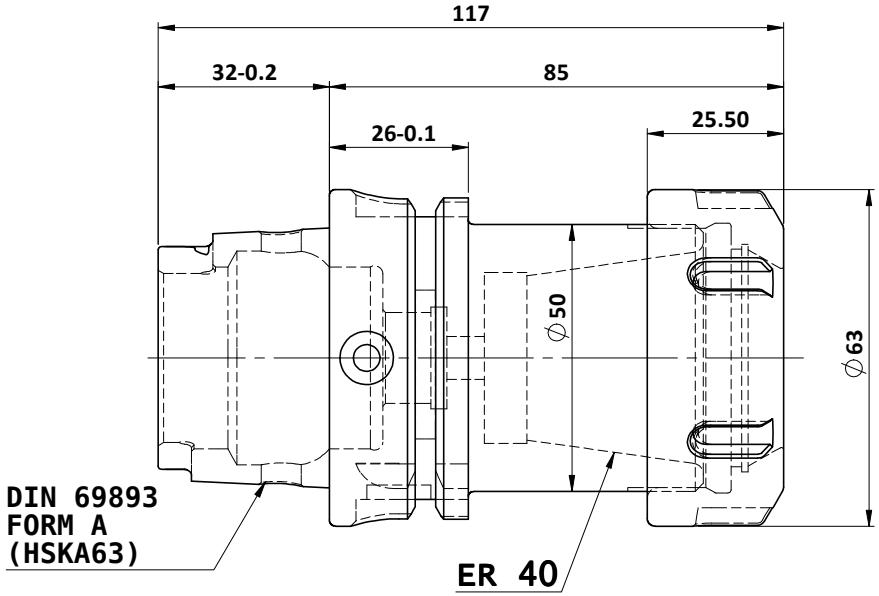

Label

2002269.0700
SPANNZANGENAUFNAHME ER COLLET

MARKING : DIN 69893 A HSK63A CCHER40 H085

BALANCING 2.5G AT 25000 RPM

WEIGHT : 1.2 kg

ITEM NO.	PART NUMBER	DESCRIPTION	QTY.
1	HSKA63 CCH ER40 085 WW	COLLET CHUCK HOLDER	1
2	NUTER40	COLLET NUT - ER40	1

μ m	0.012	0.025	0.05	0.1	0.2	0.4	0.8	1.6	3.2	6.3	12.5	25	50
GRADES		N1	N2	N3	N4	N5	N6	N7	N8	N9	N10	N11	N12
SYMBOLS													

TOLERANCE		
FREE DIMENSIONS TOLERANCE		
Dimns.	Dia	Length
0.5 to 3	± 0.05	± 0.10
3 to 6	± 0.10	± 0.15
6 to 30	± 0.15	± 0.20
30 to 120	± 0.20	± 0.25
120 to 500	± 0.30	± 0.50

MATERIALS: 16MnCr5

2020	NAME	DATE
DRAWN	HPK	08/05
CHECKED	RVL	08/05
APPROVED		
SCALE : NTS	QTY. :	

WEMAG
2002269.0700

PART NAME: HSKA63CCHER40085WW

DRAWING No. FWA063H-ERS40085

REV. 00