Rev.No.	Ch.Let	Alterations	Date	Sign.	Appd.

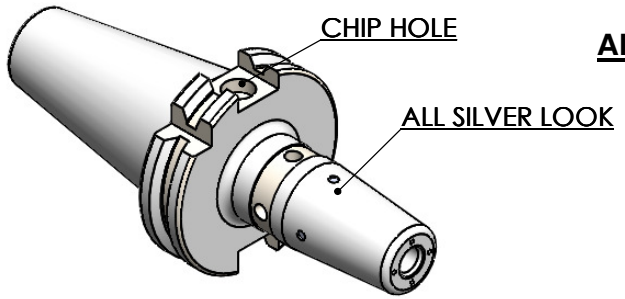

All Dimensions are in MM

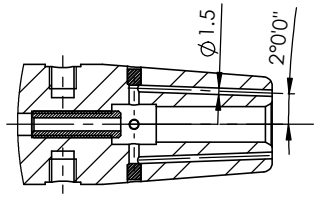

SECTION A-A

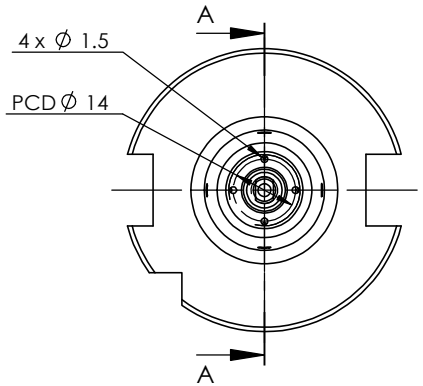

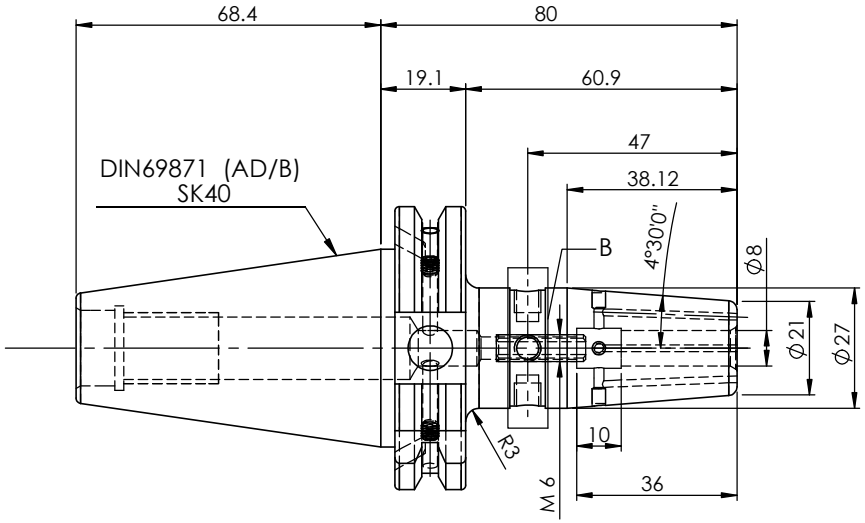

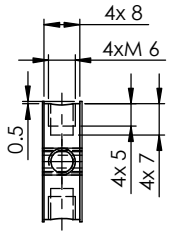

DETAIL B

LABEL :
2002266.0800
SCHRUMPFFUTTER MIT KK
SHRINK FIT HOLDER COOLANT CHANNEL
ISO 7388-1 (DIN69871) SK40 AD/AF (AD+B)
SR4 08mm X 080mm
G2,5/25000 U/MIN

NOTE :

BALANCING 2.5G@ 25000 RPM

Weight : 1.0 Kg

MARKING : ISO 7388-1 (DIN69871) SK40 AD/AF (AD+B) SFHC08H080
G2,5/25000 U/MIN

ITEM NO.	PART NUMBER	DESCRIPTION	QTY.
1	FWS409H-SFK08080	SK40SFK08080FWW	1
2	GS-M4X4	GRUB SCREW	2
3	SCWM6x1x20-FLAT	STOPPER SCREW (B.O.)	1
4	EXPANDER PLUG-22880.0053	EXPANDER PLUG-Ø3x3.6mm	4

μ m	0.012	0.025	0.05	0.1	0.2	0.4	0.8	1.6	3.2	6.3	12.5	25	50
GRADES	N1		N2	N3	N4	N5	N6	N7	N8	N9	N10	N11	N12
SYMBOLS													

TOLERANCE		
FREE DIMENSIONS TOLERANCE		
Dimns.	Dia	Length
0.5 to 3	± 0.05	± 0.10
3 to 6	± 0.10	± 0.15
6 to 30	± 0.15	± 0.20
30 to 120	± 0.20	± 0.25
120 to 500	± 0.30	± 0.50

MATERIALS: HDS

2022	NAME	DATE
DRAWN	SVR	29/01
CHECKED	RVL	29/01
APPROVED		
SCALE : NTS	QTY. :	

PART NAME: SK40SFK08080FWW

WEMAG
2002266.0800

DRAWING No. FWS409H-SFK08080

REV. 00