Rev.No.	Ch.Let	Alterations	Date	Sign.	Appd.

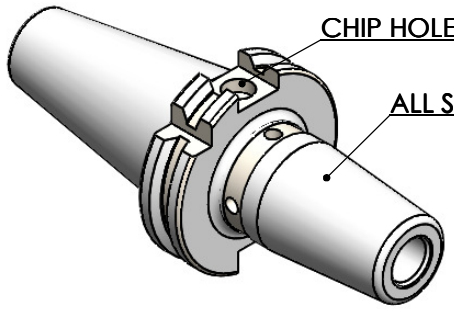

All Dimensions are in MM

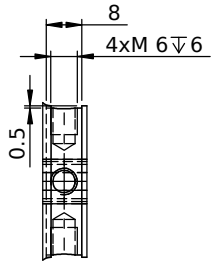

DETAIL B

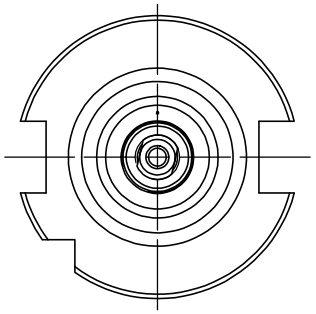

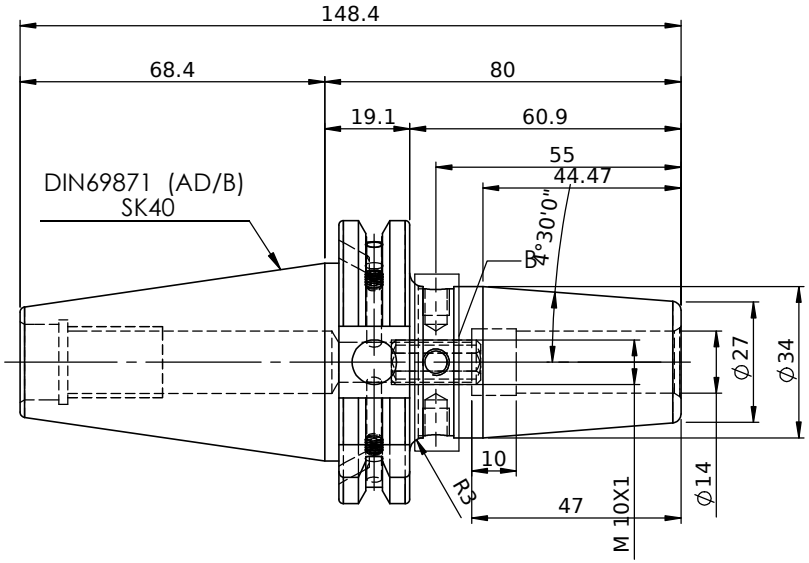

LABEL :
2002265.1400
SCHRUMPFFUTTER
SHRINK FIT HOLDER
ISO 7388-1 (DIN69871) SK40 AD/AF (AD+B)
SR2 14mm X 080mm
G2,5/25000 U/MIN

MARKING : ISO 7388-1 (DIN69871) SK40 AD/AF (AD+B) SR14H080
G2,5/25000 U/MIN

NOTE :

BALANCING 2.5G@ 25000 RPM

Weight : 1.1 Kg

ITEM NO.	PART NUMBER	DESCRIPTION	QTY.
1	F1S409H-SFC14080	SK40SFC14080FWW	1
2	SCWM10X1X20-FLAT	STOPPER SCREW	1
3	GS-M4X4	GRUB SCREW	2

μm	0.012	0.025	0.05	0.1	0.2	0.4	0.8	1.6	3.2	6.3	12.5	25	50
GRADES	N1		N2	N3	N4	N5	N6	N7	N8	N9	N10	N11	N12
SYMBOLS	▽▽▽▽					▽▽▽		▽▽			▽		~

TOLERANCE		
FREE DIMENSIONS TOLERANCE		
Dimns.	Dia	Length
0.5 to 3	±0.05	±0.10
3 to 6	±0.10	±0.15
6 to 30	±0.15	±0.20
30 to 120	±0.20	±0.25
120 to 500	±0.30	±0.50

MATERIALS: HDS

2023	NAME	DATE
DRAWN	ESK	25/03
CHECKED	RVL	25/03
APPROVED		
SCALE : NTS	QTY. :	

WEMAG
2002265.1400

PART NAME: SK40SFC14080FWW

DRAWING No. FWS409H-SFC14080

REV. 00