Rev.No.	Ch.Let	Alterations	Date	Sign.	Appd.

All Dimensions are in MM

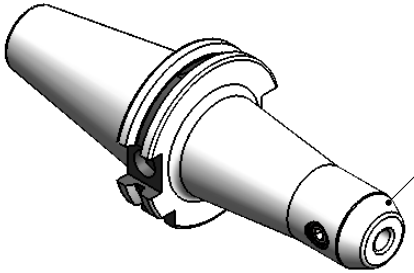

CUSTOMER APPROVAL REQUIRED	
APPROVED BY	
DATE	

FOR QUOTATION PURPOSE ONLY

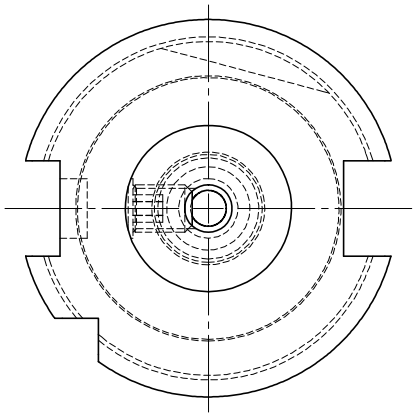

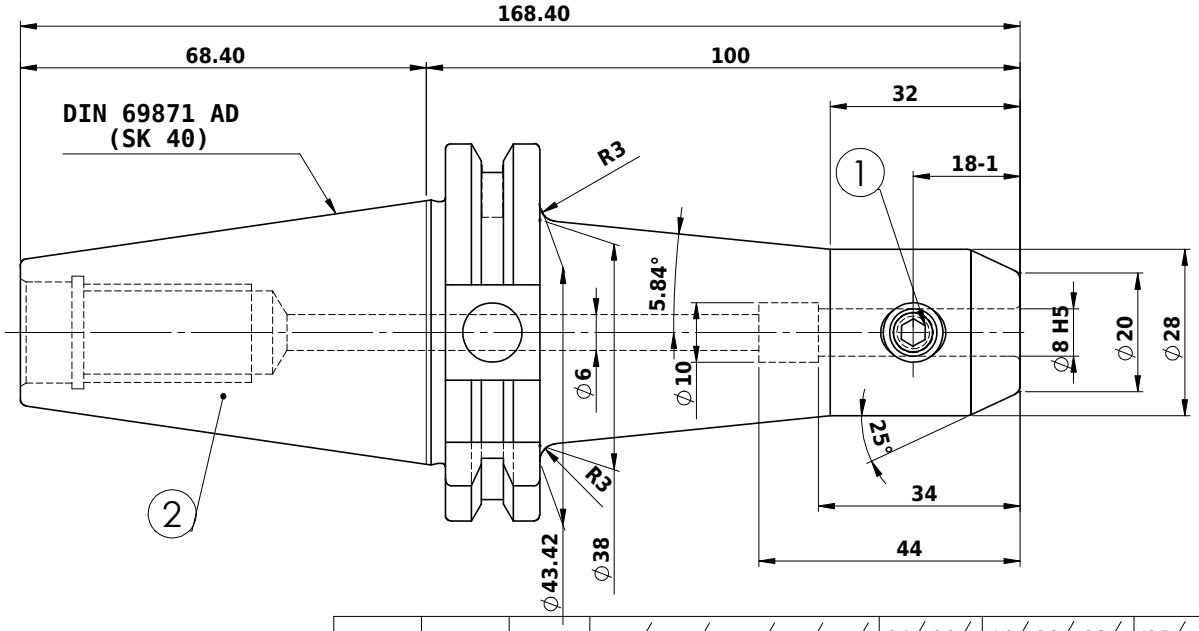

Label :
2002263.0801
WELDON-AUFNAHME
WELDON HOLDER
DIN69871 SK40 AD
WE 08 mm x 100 mm
G6.3 / 15000

NOTE :

BALANCING G6.3 AT 15000 RPM

WEIGHT : 1.25 kg

MARKING : DIN 69871 AD SK40 WE08H100
G6.3 15000 U/MIN

ITEM NO.	PART NUMBER	DESCRIPTION	QTY.
1	GS-M8X10-DIN1835-B	GRUB SCREW-(B.O.)	1
2	FWS409A-EMH08100	SK40 EM08 100 WW	1

μ m	0.012	0.025	0.05	0.1	0.2	0.4	0.8	1.6	3.2	6.3	12.5	25	50
GRADES		N1	N2	N3	N4	N5	N6	N7	N8	N9	N10	N11	N12
SYMBOLS													

TOLERANCE		
FREE DIMENSIONS TOLERANCE		
Dimns.	Dia	Length
0.5 to 3	± 0.05	± 0.10
3 to 6	± 0.10	± 0.15
6 to 30	± 0.15	± 0.20
30 to 120	± 0.20	± 0.25
120 to 500	± 0.30	± 0.50

MATERIALS: 16MnCr5

2016	NAME	DATE
DRAWN	SVK	26/11
CHECKED	RVL	26/11
APPROVED		-
SCALE : NTS	QTY. :	

WEMAG
2002263.0801

PART NAME: END MILL HOLDER

DRAWING No. FWS409A-EMH08100

REV. 00