Rev.No.	Ch.Let	Alterations	Date	Sign.	Appd.

All Dimensions are in MM

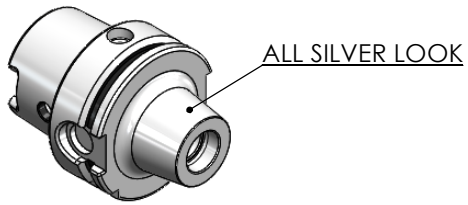

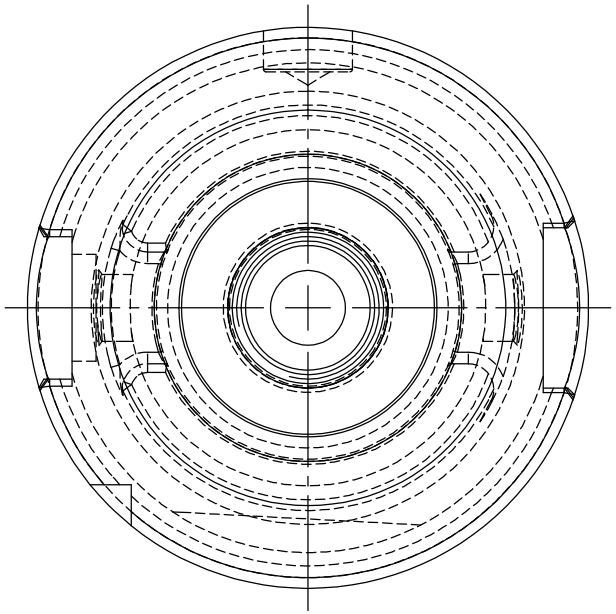

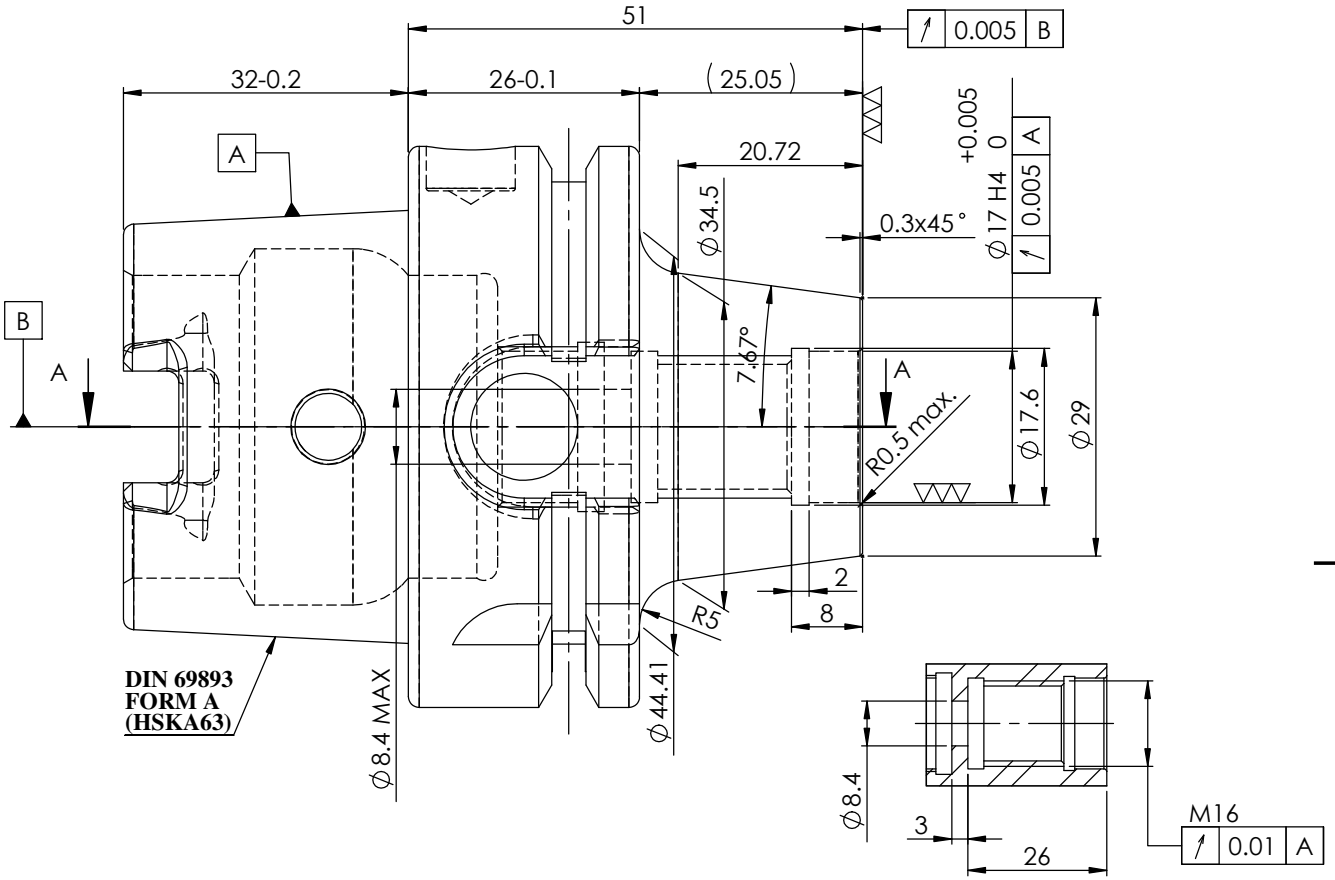

SECTION A-A
SCALE 1 : 1

LABEL:-

2002382.1604
EINSCHRAUBFRÄSERAUFNAHME
SCREW-ON HOLDER
DIN 69893 HSK63A
ES M16 x 25 mm x 51 mm
G2,5 / 25000

MARKING:- DIN 69893 A HSK63A M16 x 25mm
G2,5 25000

WEIGHT :- 0.75 Kg.

BALANCING 2.5G @ 25000 RPM

		μ m	0.012	0.025	0.05	0.1	0.2	0.4	0.8	1.6	3.2	6.3	12.5	25	50
		GRADES		N1	N2	N3	N4	N5	N6	N7	N8	N9	N10	N11	N12
		SYMBOLS													~

TOLERANCE		
FREE DIMENSIONS TOLERANCE		
Dimns.	Dia	Length
0.5 to 3	± 0.05	± 0.10
3 to 6	± 0.10	± 0.15
6 to 30	± 0.15	± 0.20
30 to 120	± 0.20	± 0.25
120 to 500	± 0.30	± 0.50

MATERIALS: 16MnCr5

2019	NAME	DATE
DRAWN	AMK	14/05
CHECKED	RVL	14/05
APPROVED		
SCALE : 2:1	QTY. :	

2002382.1604

PART NAME: HSKA63TMH16051WW

DRAWING No. FWA063H-TMH16051

REV. 00