Rev.No.	Ch.Let	Alterations	Date	Sign.	Appd.

All Dimensions are in MM

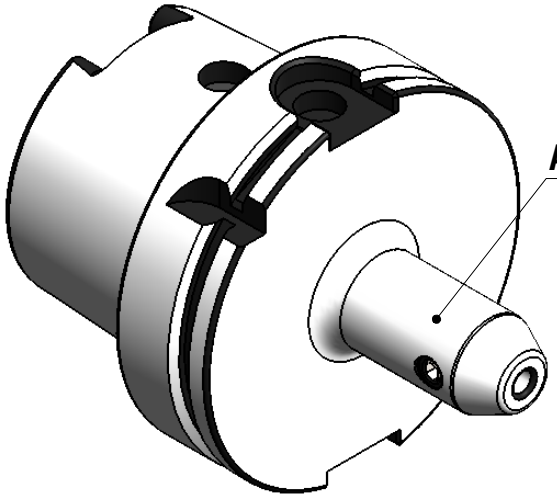

ALL SILVER LOOK

CUSTOMER APPROVAL REQUIRED	
APPROVED BY	
DATE	

FOR QUOTATION PURPOSE ONLY

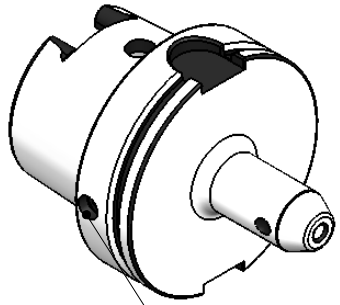

CHIP HOLE

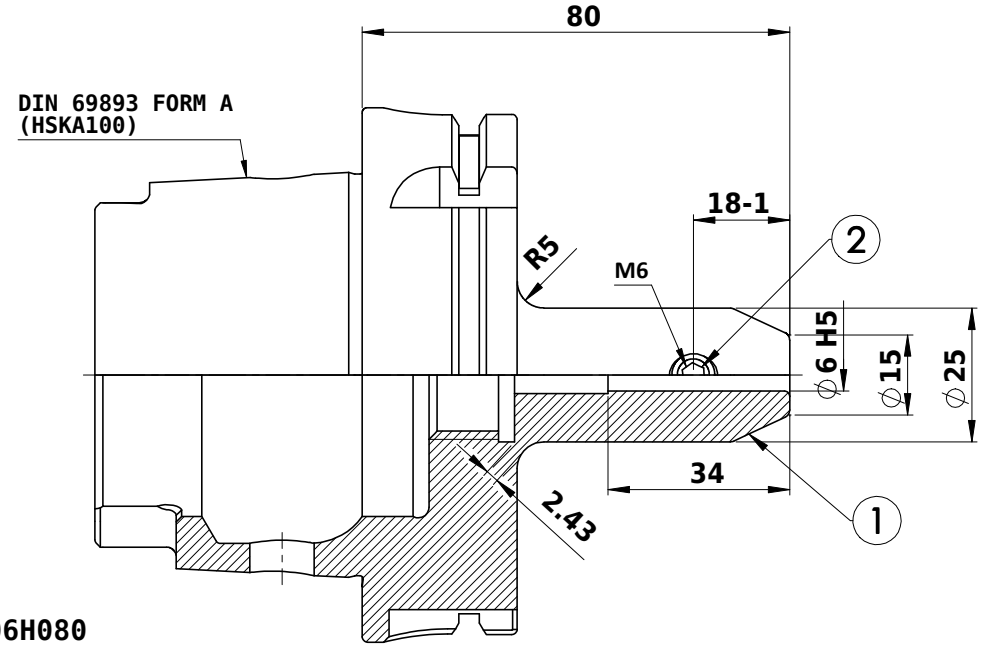

Label :

2002378.0600
WELDON-AUFNAHME
WELDON HOLDER
DIN69893 HSK100A
WE 6 mm x 080 mm
G2,5 / 25000

MARKING : DIN 69893 A HSK100A WE06H080
G2.5 25000 U/MIN

NOTE :

BALANCING 2.5G AT 25000 RPM

WEIGHT : 2.3 kg

ITEM NO.	PART NUMBER	DESCRIPTION	QTY.
1	HSKA100 EM 06 080 WW	END MILL HOLDER	1
2	GS-M6X10-DIN1835-B	GRUB SCREW (B.O.)	1

		μ m	0.012	0.025	0.05	0.1	0.2	0.4	0.8	1.6	3.2	6.3	12.5	25	50
		GRADES		N1	N2	N3	N4	N5	N6	N7	N8	N9	N10	N11	N12
		SYMBOLS													

TOLERANCE		
FREE DIMENSIONS TOLERANCE		
Dimns.	Dia	Length
0.5 to 3	± 0.05	± 0.10
3 to 6	± 0.10	± 0.15
6 to 30	± 0.15	± 0.20
30 to 120	± 0.20	± 0.25
120 to 500	± 0.30	± 0.50

MATERIALS: 16MnCr5

2015	NAME	DATE
DRAWN	MHP	29/06
CHECKED	RVL	29/06
APPROVED		-
SCALE : NTS	QTY. :	

2002378.0600

PART NAME: END MILL HOLDER

DRAWING No. HSKA100 EM 06 080 WW

REV. 00