Rev.No.	Ch.Let	Alterations	Date	Sign.	Appd.

All Dimensions are in MM

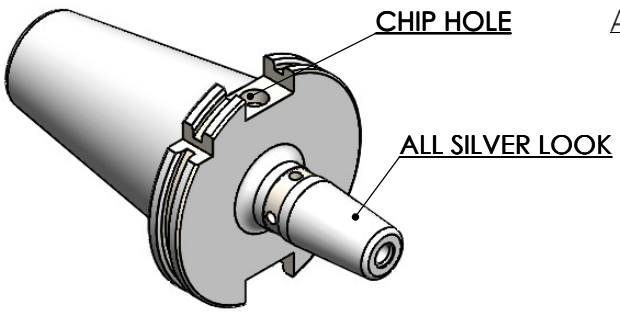

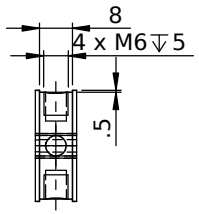

DETAIL B

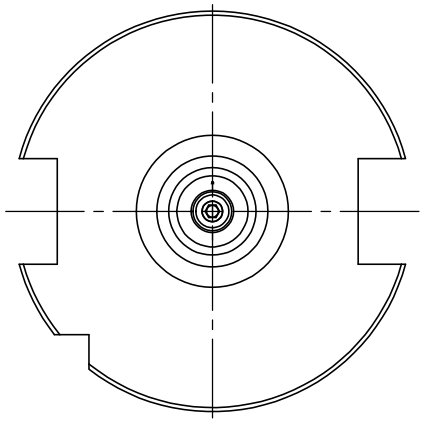

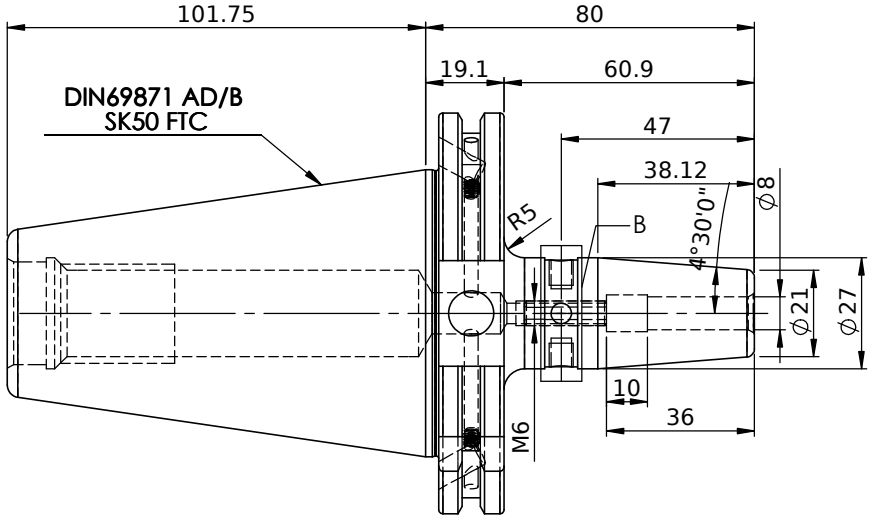

LABEL :
2002373.0800
SCHRUMPFFUTTER
SHRINK FIT HOLDER
ISO 7388-1(DIN69871) SK50 AD/AF (AD+B)
SR2 08mm X 080mm
G2,5/25000 U/MIN

MARKING : ISO7388-1(DIN69871) SK50 AD/AF (AD+B) SR08H080
G2,5/25000 U/MIN

NOTE :

BALANCING 2.5G@ 25000 RPM

Weight : 2.7 Kg

ITEM NO.	PART NUMBER	DESCRIPTION	QTY.
1	F1S509H-SFC08080	SK50SFC08080FWW	1
2	SCWM6x20	STOPPER SCREW	1
3	GS-M4X4	GRUB SCREW	2

μm	0.012	0.025	0.05	0.1	0.2	0.4	0.8	1.6	3.2	6.3	12.5	25	50
GRADES		N1	N2	N3	N4	N5	N6	N7	N8	N9	N10	N11	N12
SYMBOLS		▽▽▽▽				▽▽▽		▽▽			▽		~

TOLERANCE
FREE DIMENSIONS TOLERANCE

Dimns.	Dia	Length
0.5 to 3	±0.05	±0.10
3 to 6	±0.10	±0.15
6 to 30	±0.15	±0.20
30 to 120	±0.20	±0.25
120 to 500	±0.30	±0.50

MATERIALS: HDS

2023	NAME	DATE
DRAWN	ESK	09/06
CHECKED	RVL	09/06
APPROVED		

SCALE : NTS QTY. :

2002373.0800

PART NAME: SK50SFC08080FWW

DRAWING No. F1S509H-SFC08080

REV. 00