Rev.No.	Ch.Let	Alterations	Date	Sign.	Appd.

All Dimensions are in MM

For Customer Approval

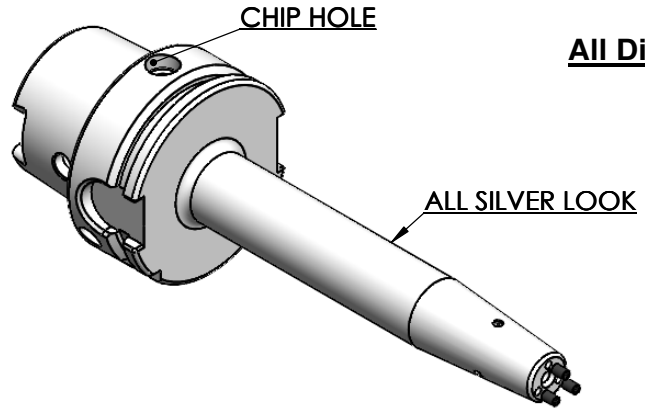

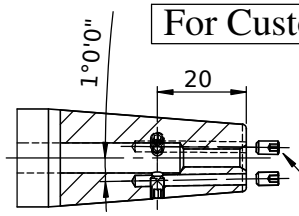

SCREWS TO BE PACKED SEPERATELY
IN PLASTIC POUCH WITH LABEL & PUT INTO
WELDON BORE & THEN SEAL THE HOLDER WITH COVER

LABEL FOR PLASTIC BAGS:
Verschlussschraube
Grub Screw
M3 X 5MM - 3 NO'S

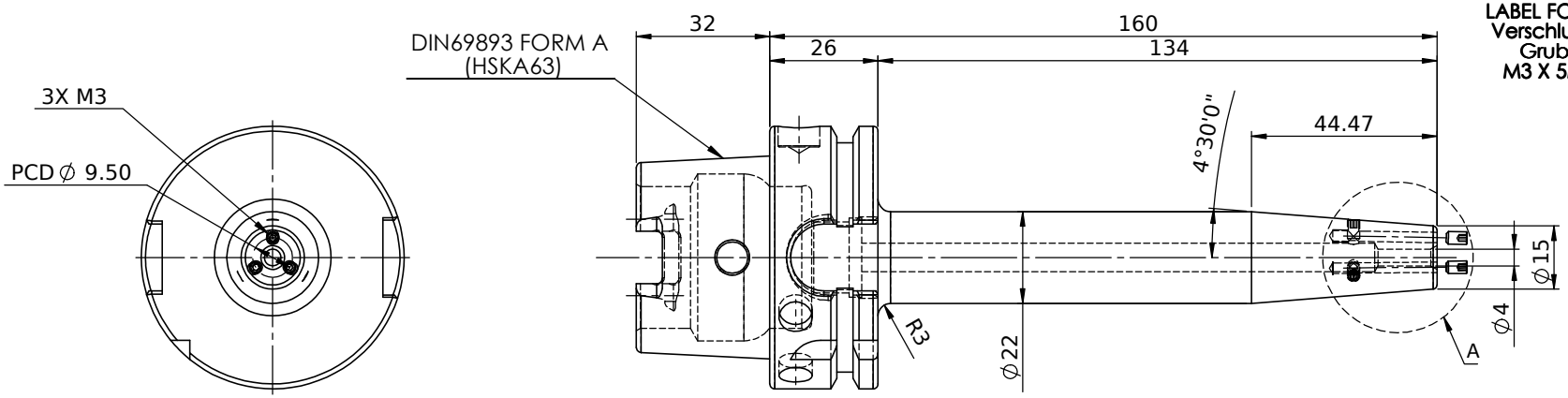

LABEL :

2002274.0402
SCHRUMPFFUTTER MIT KK
SHRINK FIT HOLDER COOLANT CHANNEL
DIN69893 HSK63A
SR5 04mm X 160mm
G2,5/25000 U/MIN

MARKING : DIN69893 A HSK63A SFHC04H160
G2,5/25000 U/MIN

NOTE :

BALANCING 2.5G@ 25000 RPM

Weight :1.0Kg

		µ m	0.012	0.025	0.05	0.1	0.2	0.4	0.8	1.6	3.2	6.3	12.5	25	50
		GRADES		N1	N2	N3	N4	N5	N6	N7	N8	N9	N10	N11	N12
		SYMBOLS													~

TOLERANCE		
FREE DIMENSIONS TOLERANCE		
Dimns.	Dia	Length
0.5 to 3	± 0.05	± 0.10
3 to 6	± 0.10	± 0.15
6 to 30	± 0.15	± 0.20
30 to 120	± 0.20	± 0.25
120 to 500	± 0.30	± 0.50

MATERIALS: HDS

2023	NAME	DATE
DRAWN	YSK	22/11
CHECKED	RVL	22/11
APPROVED		
SCALE : NTS	QTY. :	

2002274.0402

PART NAME: **HSKA63SFK04160WW**

DRAWING No. F1A063H-SFK04160

REV. 01

ITEM NO.	PART NUMBER	DESCRIPTION	QTY.
3	GS M3 x 5	GRUB SCREW	3
2	GS-M3X5	GRUB SCREW	3
1	F1A063H-SFK04160	HSKA63SFK04160WW	1